PROD. CODE	DESCRIPTION	PROD. CODE	DESCRIPTION
IND10168AL	ADAPTOR 21mmO/D x M20 STRAIGHT	13116	ZERO – BLOW OFF NOZZLE
IND10178	MOUNTING PAD	A16	TAILPIECE 1/4"
IND10181	CONDUIT – 20mm O/DIA M.S.	A17	O CLIP 1/2"
IND10182	ELBOW – 20mm O/DIA CONDUIT	A18	UNION NUT BRASS 1/4"
IND10183	COUPLER – 20mm O/DIA CONDUIT	CAB1446XK	HOPPER EXHAUST KIT – 1446 CABS
IND10184	BUSH – 20mm HEX SHORT MALE	CAB154	ABRASIVE CHUTE 800P/1200P
IND10187	SADDLE – 20mm CONDUIT	CAB16	LIGHT FITTING
IND10189	TERM BOX–75x75x37 MS	CAB196	LATCH – A2 DRAW STYLE (YELLOW)
IND10217	DUCT COUPLER – 4" DIA MALE	CAB383FG	VALVE – 3/8" 5/2 FOOT/SPRING
IND10679	PUSH–BUTTON ASSEMBLY DOUBLE	CAB73A	ENCLOSURE 80mm x 82mm x 85mm
IND10823	CONDUIT – FLEXIBLE SP20	CABLD34	ANTI ETCH SCREEN (5 PER SET)
IND10824	CONDUIT ADAPTOR STR. SP20/M20	CABLD37	BLAST GATE DAMPER – 3"
IND10825	CONDUIT ADAPT.STR.SWV.SP20M20	CABLD38	BLAST GATE DAMPER – 4"
IND10859A	CONTROL PANEL – 1.1kW AUTO–PULSE	CABLD7	ADAPTOR NIPPLE 1/4" x 1/2"
IND11542	VALVE – 1/8" 3/2 SOL. SPR. 240V	CABRG14S	REGRADER ASSEMBLY – 14" POT
IND11542P	PLUG – DIN C/W 1m MOULDED CABLE	CHT3	CABLE TIE
IND11566	HOSE CLIP – 89mm/101mm	CPF0021	ELBOW – 1/4" M/F PLATED
IND1250PSB	1250COMP PRES' CAB. SUB–BUILD	HC5068	CABINET ARM HOLES – PLASTIC
IND1250RLKA	LINING KIT– 1250 CAB TOP, FRONT	HC5132	LIGHT MODULE FABRICATION
INDMJC92222	DUST COLLECTOR – 1.1kW	HC53721	SPIGOT – 3" FLANGED
IND1446SGVCR	BLAST MACHINE – CABINETS	HC55271	SPIGOT – 3" FLANGED x 90 DEG.
JC3	HOSE CLIP WORM DRIVE 70 – 89	HC7307	BRACKET – SOLENOID VALVE
JC4	HOSE CLIP WORM DRIVE 95 – 114	HOSE13	HOSE – 3" HEAVY DUTY SUCTION
KB48	1/4" x 3/8" NIPPLE	HOSE20	HOSE – 3" FLEXIBLE RUBBER STD
PE11023	NIPPLE – 3/8" x 1/4" BRASS	HOSE21	HOSE – 4" FLEXIBLE RUBBER STD
RCAMV10	TEE 1/4" BR F	HOSE2A	BLAST HOSE 3/4"x 5m COUPLED
RCAMV4	BULKHEAD ADAPTOR 1/4" C/W NUT	IND10087	CONDUIT – 21mm O/DIA NYLON
RM23	ADAPTOR 1/4"x1/4"	IND10123	SLEEVE/GLOVE ASSEMBLY – PAIR
XXHOSE7	AIR HOSE 1/4"ID BLUE BARE	IND10134	INTERLOCK SWITCH – CABINET
		IND10151	ZERO INTERLOCK BRACKET L

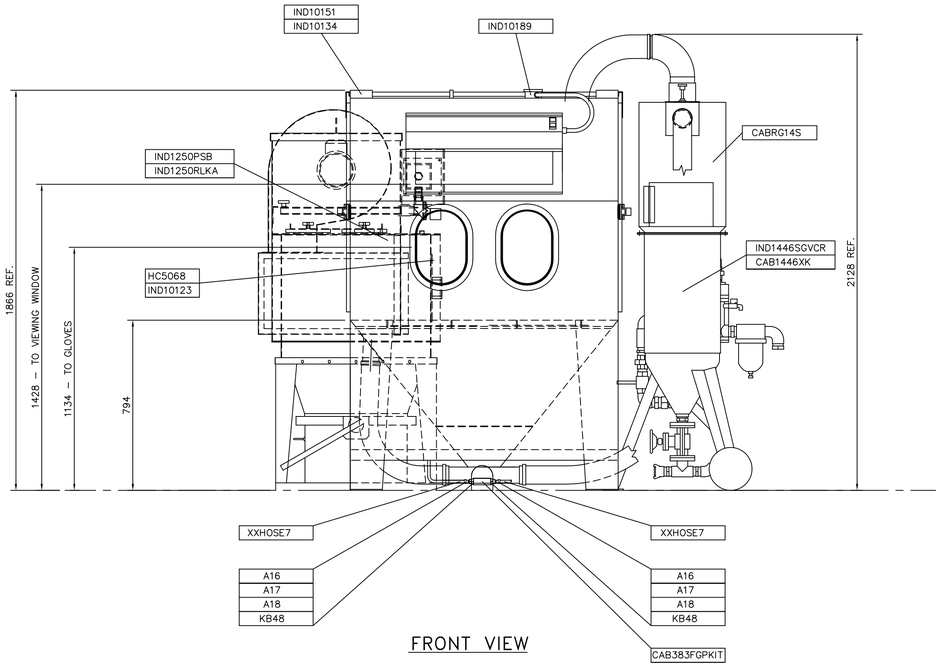

FRONT VIEW

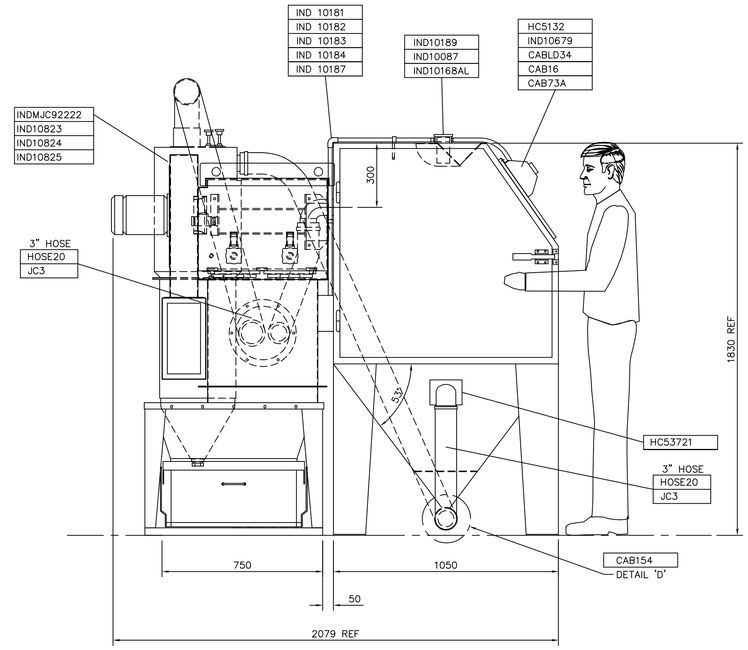

SIDE VIEW

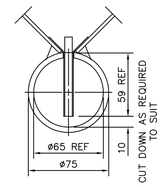

ENLARGED DETAIL 'D'

SHOWING FITTING OF CAB154

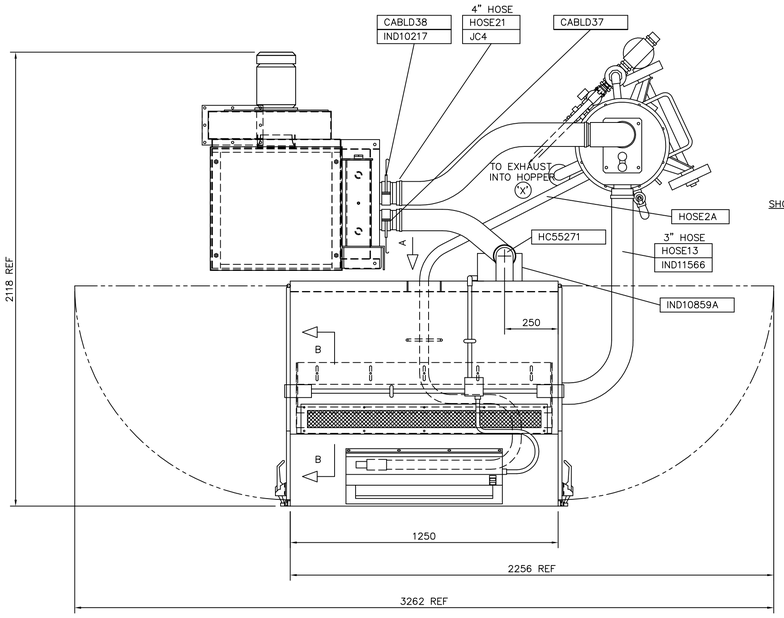

PLAN VIEW

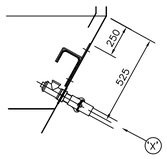

SECTION OF HOPPER AT ARROW 'A'
SHOWING EXHAUST INTO HOPPER (CAB1446XK)

ELECTRICAL REQUIREMENTS

FAN MOTOR – 1.1kW ~ 415V/3PH/50Hz – 2.35 A FLC
LIGHT MODULE – 36W (2x18 W) ~ 240V/1PH/50Hz
SOLENOID VALVE – 14VA ~ 240V/1PH/50Hz

PAINT SPECIFICATION

CLEMCO PREP & PAINT SPEC RAL6003 (SPRUCE GREEN)

REFERENCE DRAWINGS

FOR ELECTRICAL DIAGRAM SEE HC–5264
FOR PNEUMATIC DIAGRAM SEE HC–5121
FOR EXHAUST INTO HOPPER SEE HC–6327

TECHNICAL SPECIFICATION

1. NOMINAL WORK CHAMBER SIZE = 1250(W) x 1000(D) x 1000(H)
2. MAXIMUM WORKTABLE CAPACITY = 100 KG
3. MINIMUM INTERIOR ILLUMINATION = 500 LUX.
4. BLOW–OFF GUN SUPPLIED AS STANDARD.
5. CALIBRATABLE DIAL–AIR REGULATOR SUPPLIED AS STANDARD.
6. 6 mm THK CLEAR POLISHED GEORGIAN WIRED GLASS TO BS 952 VIEWING WINDOW.
7. RUBBER CURTAINS TO INTERIOR WALLS.
8. SAFETY DOOR INTERLOCKS.

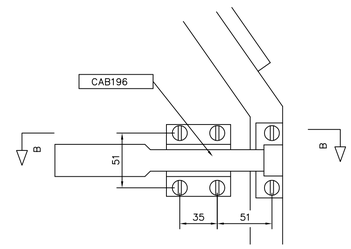

ENLARGED VIEW SHOWING HANDLE

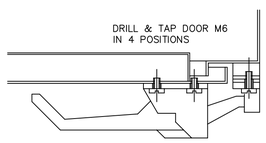

SECTION ON ARROWS 'B–B'

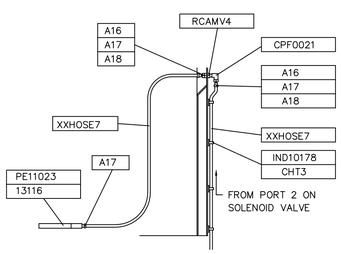

BLOW OFF GUN ASSEMBLY

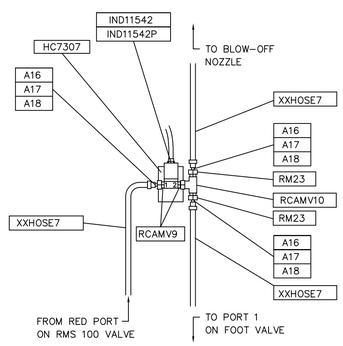

SOLENOID VALVE ASSEMBLY

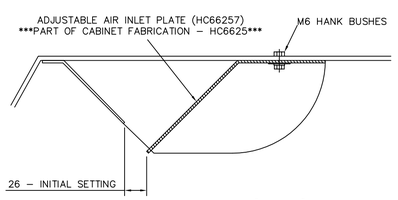

ENLARGED SECTION 'B–B'

DETAIL SHOWING FITTING OF ADJUSTABLE AIR INLET PLATE (HC66257)

ISSUE No	MOD. No	DRAWN	CHECKED	DATE
8	5026	A.M.		31.10.2013
7	4687	A.M.		19.04.2010
6	4118	ML		21.4.04
5	3621	A.M.		28.06.2001
4	3480	A.M.		28.11.2000
3	3478	A.M.		27.11.2000
2	3465	A.M.		27.10.2000
1	ORIGINAL	A.M.		27.10.99

GENERAL NOTES

1) MATERIAL: COLD ROLLED MILD STEEL SHEET TO BS 1449 GRADE CR4 OR EQUIVALENT; HOT ROLLED MILD STEEL SECTIONS TO BS 4360 GRADE 43A OR EQUIVALENT. FINISH: SELF–COLOUR FOR PAINTING.
2) REMOVE ALL SHARP EDGES AND BURRS.
3) JOINTS AND CONSTRUCTION TO SUIT MANUFACTURERS' STANDARD PROCESSES.
4) DIMENSIONS AND TOLERANCES TO BS 308.
5) MACHINED SURFACES ▽ UNLESS STATED.
6) THREADS TO BS 3643 6H/6g OR BS 21 UNLESS STATED.
7) *
8) *
9) *

WELDING

WELDING GENERALLY TO BS 5135 CAT. C & BS 4872 PT. 1 ALL JOINTS & CONNECTIONS OF R.S. SECTIONS CONTINUOUS PLATE TO R.S. SECTION INTERMITTENT 75 WELD 100 GAP

PLATE THICKNESS	1.6; 2; 2.5; 3	5; 6; 8; 10	12	PLATE OVER 12
WELD SIZE	3	6	10	AS SPECIFIED

TOLERANCES

	FABRICATION	MACHINING
HOLE CENTRES	±1mm	±0.25mm
DIAMETER	±3mm	±0.25mm
ANGULAR	±1°	±0.5°
LINEAR	±3mm	±0.5mm

COPYRIGHT

THIS DOCUMENT IS THE PRIVATE & CONFIDENTIAL PROPERTY OF HODGE CLEMCO LIMITED & MUST NOT BE REPRODUCED OR DISCLOSED TO ANY THIRD PARTY WITHOUT PRIOR WRITTEN CONSENT OF THE AFOREMENTIONED COMPANY.

HODGE CLEMCO LTD

HODGE CLEMCO LIMITED,
ORGREAVE DRIVE,
SHEFFIELD,
S13 9NR.
TEL. 0114 2540600
FAX. 0114 2540250

DO NOT SCALE – IF IN DOUBT ASK

TITLE G.A. IND 1250COMP XM SERIES PRESSURE CABINET SYSTEM

CUSTOMER STOCK

DRAWN	DATE	DIMENSION	SCALE
A.M.	27.10.99	MM	1:15

DRAWING No HC–6659 SIZE A1